SPRING BOLTS – *FINGER PULL LATCHES*

54 CAB LOCK

- Steel construction/zinc finish
- Accepts 5/16” shank
- ✓ **Available with/without inside handle**
- ✓ **Available with left or right hand**
- ✓ **Available with standard or reverse bolt (without handle)**

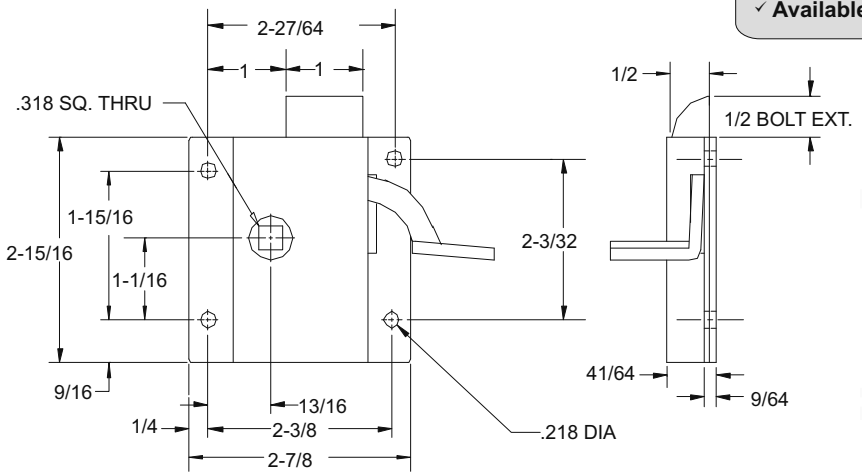

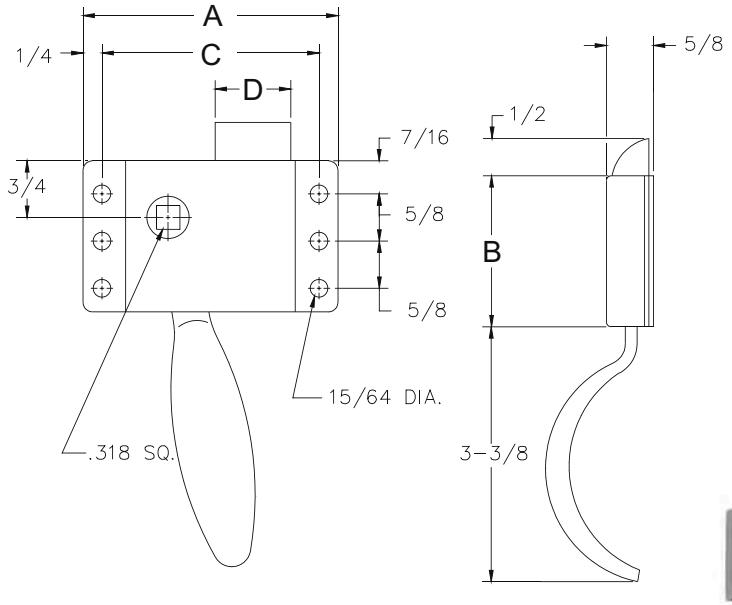

55 CAB LOCK

- Accepts 5/16” shank
- ✓ **Available in stainless steel**
- ✓ **Available in steel construction/zinc finish**
- ✓ **Available in left or right hand**
- ✓ **Available with mounting flange**
- ✓ **Available with inside override feature**
- ✓ **Available with plastisol coating on handle**
- ✓ **Available with heavy duty case**

	A	B	C	D
55	3 3/8	2	2 7/8	1
55A	4 11/32	2 3/8	3 5/8	1 1/2
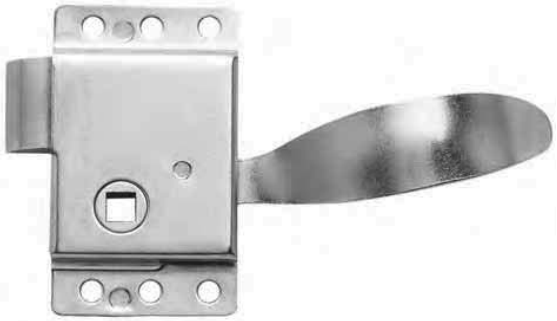
All Dimensions are in inches